MXMA600B INSTALLATION GUIDE

①

②

FRONT ELEVATION

PLANFORM ELEVATION

MXMA600B ACCESSORIES LIST

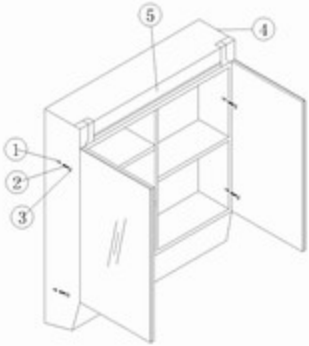

NO	Accessories	Quantity
①	Plastic Expansion Pipes	4
②	Screws	4
③	Decorative Cover	4
④	Mirror Cabinet	1
⑤	Lampshade	1